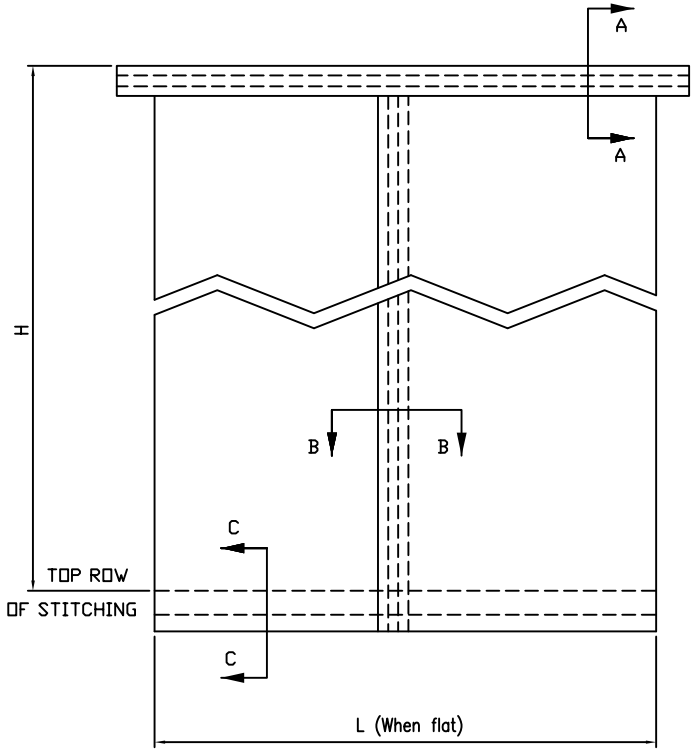

Section: A-A

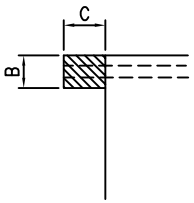

Section: B-B

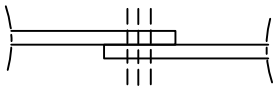

Section: C-C

DIM	VALUE	EXTRA INFO
H	mm	Height filter bag
L	mm	Flat width filter bag
B	mm	Height felt ring
C	mm	Width felt ring

REV.	ZONE	ECO NUMBER	REVISIONS	APP.	DATE

LIMITATION:

MATERIAL:

PROD. CODE:

REF. N°:

USED ON:

DO NOT SCALE

TOLERANCES UNLESS OTHERWISE SPECIFIED

<6	± 0,2
6 – 30	± 0,5
30 – 100	± 0,8
100 – 300	± 1,2
300 – 1000	± 2
Angles	± 1°

RELEASE N°		
PROD. DATE		
EXP. N°		
EXP. DATE		
FIRST P.O.M.		
DR.	RD	18/05/2005
CHK.		
design app.		
prod. app.		

FIRST ANGLE PROJECTION

TITLE: POCKET FILTER

NUMBER: 729–0083

REVISION: 0

SCALE: NTS

SHEET: 1 of 1

SIZE: A3

c/c A7290083_R00

SECTIONAL SIZE

OUTLINE SIZE

DESIGN CONTROL

DRAWING LOCATION:

Donaldson. Europe
B–3001 Leuven
Belgium
I.A.F.

All rights to manufacture, copy, reproduce or dispose of this writing or its contents are reserved unless otherwise specified in writing by donaldson europe.